Datasheet

77.131 LED oven lamp

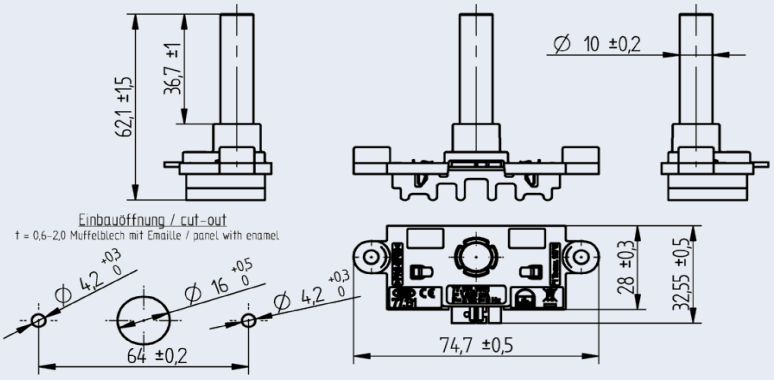

Part no.
77.131.1001-0

Symmetrical light characteristic
Screw fixing: for M3 screws
alternatively: push-in installation using the P2F fixing element 28.905

- The variable length of the glass rod allows for flexible installation heights in the oven.
- Variable LED parameters (CCT, CRI, number of LEDs) can be customized.
- The maximum permissible current of the lamp must be determined under the most unfavorable operating condition.
- The choice of our products, as well as the technically correct installation according to the relevant regulations (e.g. IEC 62031 and IEC60335), is the sole responsibility of the user.

Special versions with higher requirements such as steam-tight construction, microwave shielding, or pyrolysis suitability are available on request.

Material data	
Solid glass rod	Borosilicate glass
Housing	PA
Heat sink	Aluminium
Weight	38 g
Connection data	
Wire-to-Board	For Stocko connector MFVV 7238-R02-W72-CCC-000-NN, coding 67 and equal products
Electrical data	
Operating mode	Constant current
Voltage rating	3 V
Current rating	1.0 A
Power consumption	3 W
Dimmable	yes, with suitable control gear
Number of LEDs	1
Photometric data Ta @ 25°C in thermal steady state	
Luminous flux	270 lm
Colour temperature	3500 K
Lumen maintenance	*L70B50 6000 h
Temperature data	
max. temp. @ Tc point on heat sink	110°C

For operation use constant current drivers, which ensure the following safeguards:
1) short circuit protection 2) overload protection 3) idle state safe

* According to BJB test conditions
Tolerances of electrical and optical data: ±10%

This page is only valid in conjunction with the general information provided at www.bjb.com/en/help-service/general-information-products/ and with additional information on the specific product available at www.bjb.com.