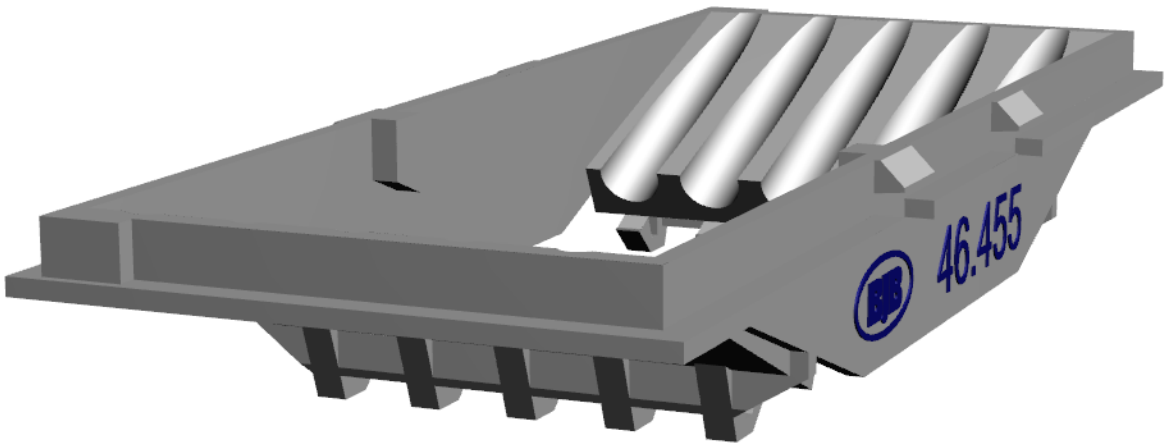
46.455