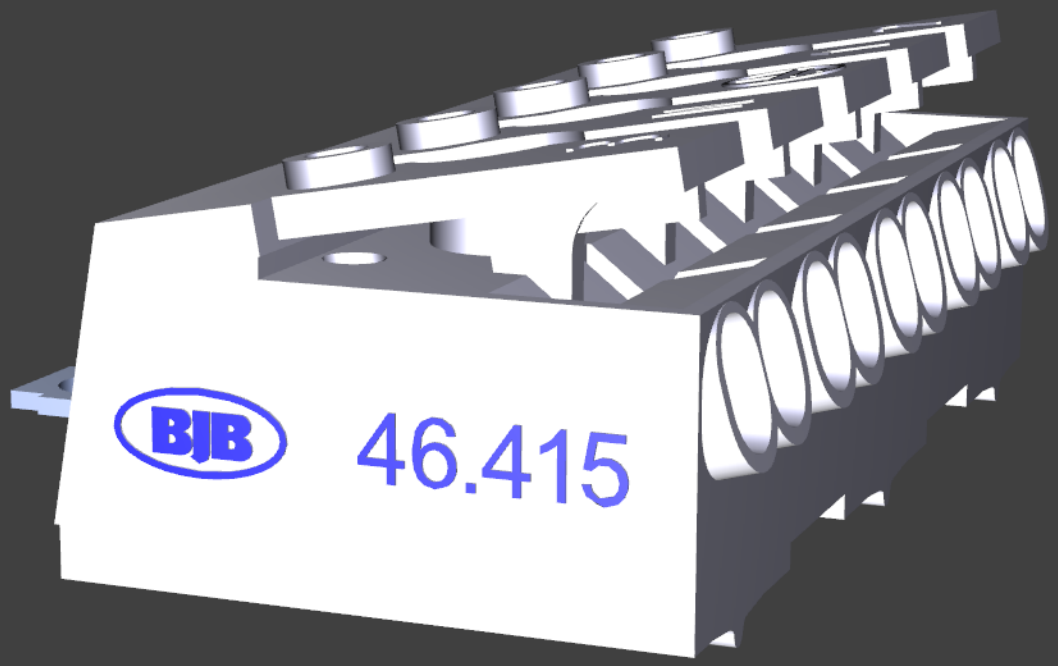
BJB
46.415